1. Pre-delivery Inspection

A: GENERAL DESCRIPTION

The purposes of the pre-delivery inspection (PDI) are as follows.

- Remove the additional parts used for ensuring the vehicle quality during transportation and restore the vehicle to its normal condition.
- Check the vehicle before delivery is in normal condition.
- Check the vehicle or parts for any damage occurred during transportation or storage.
- Check the vehicle after repair is in normal condition.
- Make sure to provide a complete vehicle to customer.

For above reasons, all SOAs (dealerships) must carry out the PDIs before delivery of vehicle.

Refer to this manual unless otherwise specified.

B: PRE-DELIVERY INSPECTION (PDI) PROCEDURE

Perform the procedures indicated in the table below.

Static Checks Just After Vehicle Receipt

Operation	Check point
1. Appearance check	1. If the vehicle is covered with protective coating, visually check the vehicle body for damage and dents. If the protective coating has been removed, visually check the painted body surfaces in detail for damage or rust. 2. Visually check the glass and light lenses for any damage, cracks or excessive gaps between body sheet metal. 3. Visually check the plated parts for any damage.
2. Tire check	1. Check the tires for damage, defective, and dents on wheels. 2. Check the tire air pressure.
3. Fuse installation	If the vehicle is about to be delivered to customer, attach the room lamp fuse.
4. Air conditioner harness connection	If the vehicle is about to be delivered to the customer, connect the air conditioner harness.
5. Lock/unlock and open/close operation checks of doors	1. Using the key, check the trunk lid can be locked or unlocked normally. 2. Open and close all doors to check that there are no problems. 3. Operate the power door lock switch to check that the rear gate locks and unlocks normally.
6. Operation check of child safety lock system	Check the child safety lock system operates normally.
7. Open/close operation checks of trunk lid	1. Using the key, check that the trunk lid can be locked or unlocked normally. 2. Operate the trunk lock release lever to check that the trunk lid opens normally. 3. Use the valet key to check that the lock cannot be released. 4. Open and close the trunk lid to check that there are no problems.
8. Check the rear gate for lock/unlock and open/close operations.	1. Check if the rear gate can be unlocked normally through the emergency hole. 2. Open and close the rear gate to check that there are no problems.
9. Operation check of trunk lid release lever	Operate the trunk lid release lever to check that the trunk lock is unlocked normally.
10. Operation check of fuel lid opener lock release lever	Operate the fuel lid opener to check that the fuel filler lid can be unlocked normally.
11. Accessory check	Check that the following accessories are equipped. • Owner's manual • Warranty booklet • Maintenance note • Spare key • Key No. plate • Jack • Tool set • Spare tire
12. Operation check of front hood lock release system	Operate the front hood lock release lever to check that the front hood opens normally.
13. Battery	Check the battery for any abnormal conditions such as rust or traces of battery fluid leaks.
14. Brake fluid	Check the fluid level.
15. Engine oil	Check the engine oil level.
16. Transmission fluid	Check the fluid level.
17. AT front differential oil	Check the AT front differential oil amount.
18. Engine coolant	Check the engine coolant level.
19. Clutch fluid	Check the clutch fluid amount.
20. Window washer fluid	Check the window washer fluid amount.
21. Front hood latch check	Check that the hood closes properly and that it can be locked securely.
22. Keyless entry system	Check that the keyless entry system operates normally.
23. Security system	Check that the security system operates normally.
24. Seat	1. Check the seat surfaces for stains or dirt. 2. Check the seat installation conditions and functionality.
25. Seat belt	Check the seat belt installation conditions and functionality.

Checks with the Engine Running

Operation	Check point
26. Test mode connector	Test mode connector
27. Immobilizer system	1. Check that the engine starts with all keys that are equipped on vehicle. 2. 60 seconds after turning ignition switch from ON to ACC or OFF, or immediately after removing the key, check that the security indicator light is blinking.
28. Starting condition	Start the engine and check that the engine starts smoothly.
29. Exhaust system	Check that the exhaust noise is normal and no leaks are found.
30. Indicator and warning lights	Check that all indicator lights and warning lights are operating correctly.
31. Heater & ventilation	Check that the heater & ventilation system operates normally.
32. Air conditioner	Check that the air conditioner operates normally.
33. Clock	Check that the clock operates normally.
34. Radio	Check the radio and AUX for proper operation.
35. Front accessory power supply socket	Check that the front accessory power socket operates normally.
36. Lighting system	Check that the lighting system operates normally.
37. Window washer	Check that the window washer system operates normally.
38. Wiper	Check that the wiper system operates normally.
39. Power window operation check	Check that the power window operations normally.
40. Driver's control center differential	Check that the indicator light operations normally.

Dynamic Test with the Vehicle Running

Operation	Check point
41. Brake test	Check the foot brake for normal operations.
42. Parking brake	Check the parking brake for normal operations.
43. AT shift control	Check that the AT shift patterns are correct.
44. Cruise control	Check that the cruise control system operates normally.

Checks after Dynamic Test

Operation	Check point
45. ATF level	Check that the ATF level is correct.
46. Power steering fluid level	Check that the power steering fluid level is normal.
47. Fluid leak check	Check for fluid/oil leaks.
48. Water leak inspection	Spray the vehicle with water and check for water leaks.
49. Appearance check 2	1. Remove the protective coating (if equipped). 2. Check the body paints for damage and stain. 3. Check the plated parts for damage and rust.

1. APPEARANCE CHECK

- If the vehicle is covered with protective coating, visually check the vehicle body for damage and dents.
- If there is no protective coat, check the painted surface of the vehicle body for damage or rust, and repair as necessary.
- Check the window glass, door glass, and lights for any cracks or damage, and replace as necessary.
- Visually check the plated parts, such as the grilles and door knobs, for damage or loss of gloss and replace the parts as necessary.

2. TIRE CHECK

- Check for damage on the outside surface of the tires.
- Refer to the following table and inspect the tire air pressure.

Tire size	Tire inflation pressure kPa (kgf/cm^2, psi)	
	Front	Rear
P205/55R16	230 (2.3, 33)	210 (2.1, 30)
215/45R17	230 (2.3, 33)	220 (2.2, 32)
225/45R17	240 (2.4, 35)	200 (2.0, 29)

3. FUSE INSTALLATION

Fuses for the room light circuit on initially delivered vehicles are removed to prevent battery discharge. Attach the 20 A fuse (A) as shown in the figure.

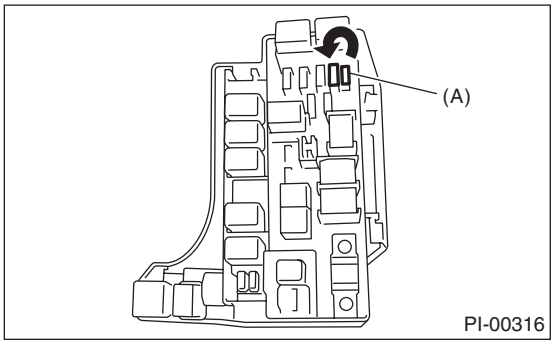

4. AIR CONDITIONER HARNESS CONNECTION

Disconnect the air conditioner harness immediately after vehicle delivery to protect the air conditioner compressor. Connect the harness as shown in the figure.

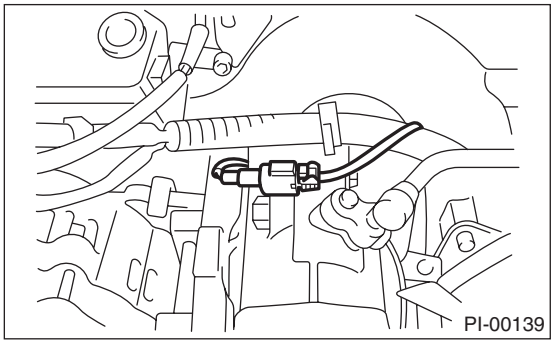

5. LOCK/UNLOCK AND OPEN/CLOSE OPERATION CHECKS OF DOORS

1) Using the key, lock and unlock the door several times to check for normal operation. Open and close the door several times for smooth movement.

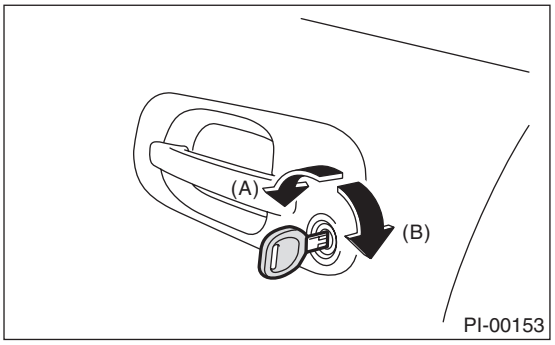

(A) Unlock
(B) Lock

2) Close the door of driver seat completely, and place the door lock knob (A) to the lock position. Then pull the inner remote (B) to ensure that doors will not open.
For other doors, place the door lock knob (A) to lock position and then pull the inner remote (B) to ensure that doors will not open.

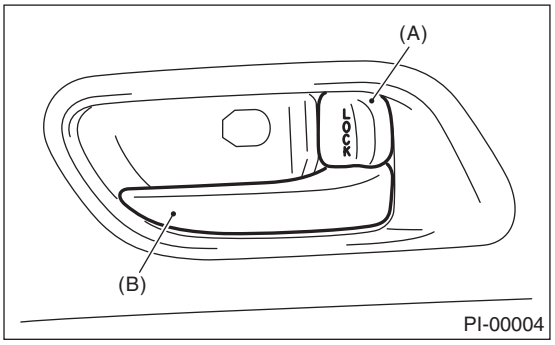

(A) Door lock knob
(B) Inner remote

3) Close all doors, and press the lock side of power door lock switch (A) on the driver's side and passenger side. Check that all doors including rear gate are locked.

- Driver's side

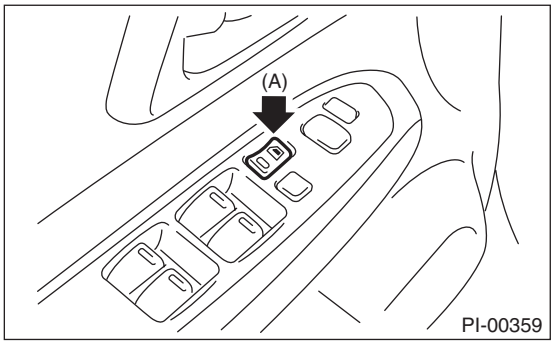

- Passenger's side

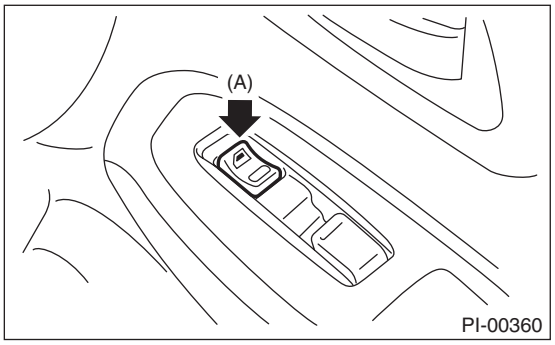

4) Press the unlock side of the power door lock switch on the driver and passenger sides. Check that all doors including rear gate are unlocked.

- Driver's side

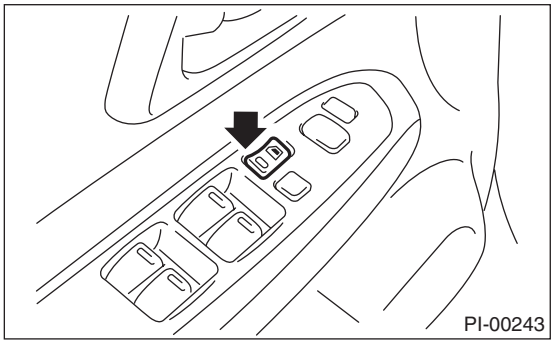

- Passenger's side

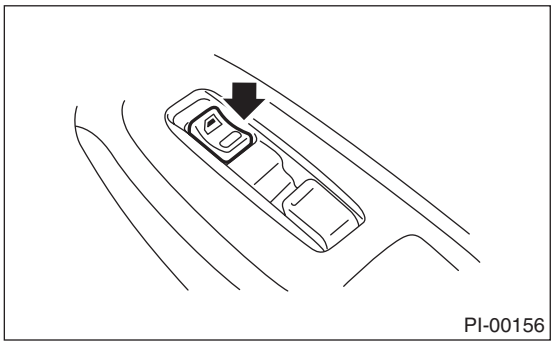

6. CHECK THE OPERATION OF CHILD SAFETY LOCK SYSTEM

1) Set the child safety lock on both rear doors to the lock position.
2) Close the rear doors completely.
3) Check that the lock levers of the rear doors are in the unlock position. Then, pull inner remote of rear doors to ensure that doors will not open.
4) Pull the outer handles to ensure that doors will open.

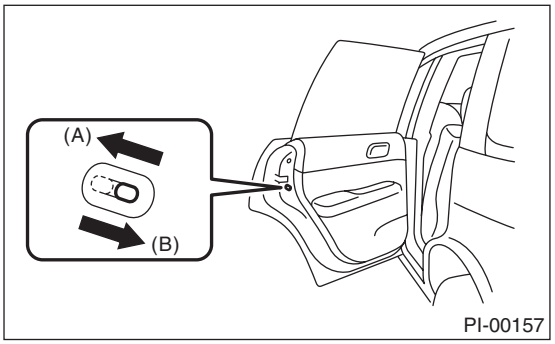

(A) Unlock
(B) Lock

7. OPEN/CLOSE OPERATION CHECKS OF TRUNK LID

1) Operate the trunk lock release lever to check that the trunk lid opens.
2) Using the key, unlock the door several times to check for normal operation.
3) Open and close the trunk lid several times for smooth movement.

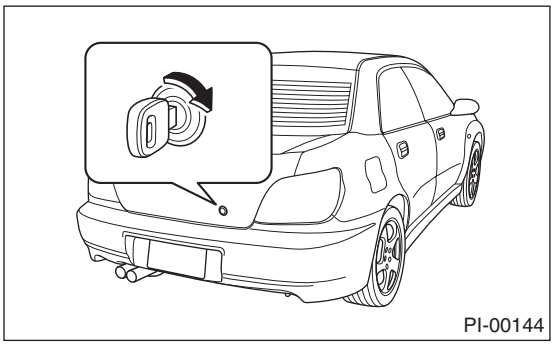

4) Use the valet key to make sure that the trunk lid and glove box cannot be opened.

5) Set the trunk lid release lever to the cancel position, and check that the trunk lid can only be opened with the key.

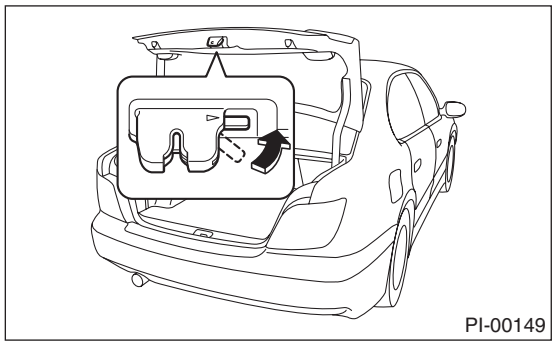

8. CHECK THE REAR GATE FOR LOCK/ UNLOCK AND OPEN/CLOSE OPERATIONS

1) Open and close the rear gate several times for smooth movement.
2) Operate the rear gate emergency release lever to check that the rear gate can be locked and unlocked properly.
(1) Remove the cover inside the rear gate.

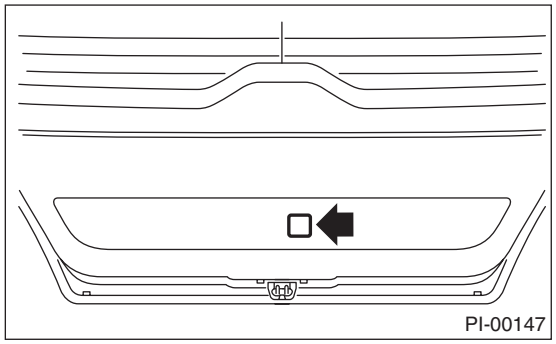

(2) Operate the lever to check that the rear gate is locked and unlocked normally.

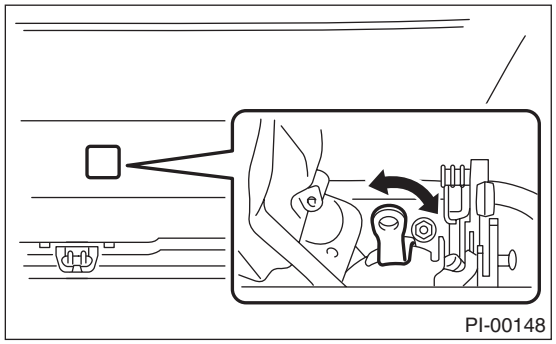

9. OPERATION CHECK OF TRUNK LID RELEASE HANDLE

1) Use a flat tip screwdriver. Slide the screwdriver blade from the slit aperture of the lock assembly fully to the end until you hear a click. This places the latch in the locked position.

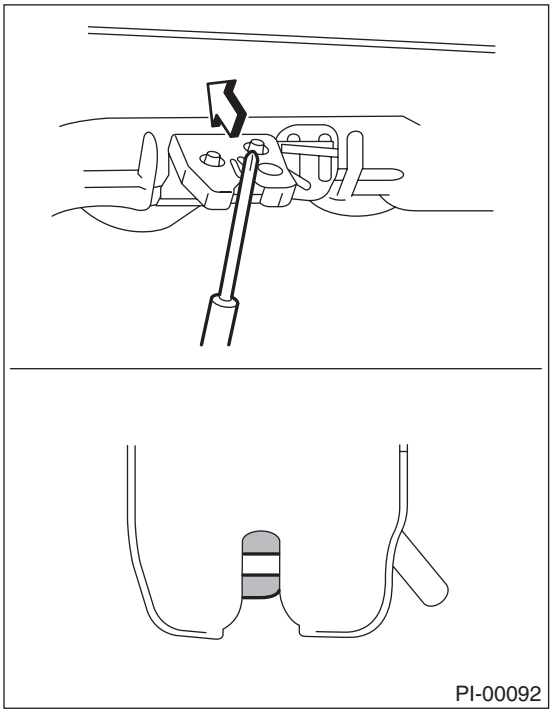

2) Move the release handle from outside the vehicle in the direction of the arrow to check if the latch is released.

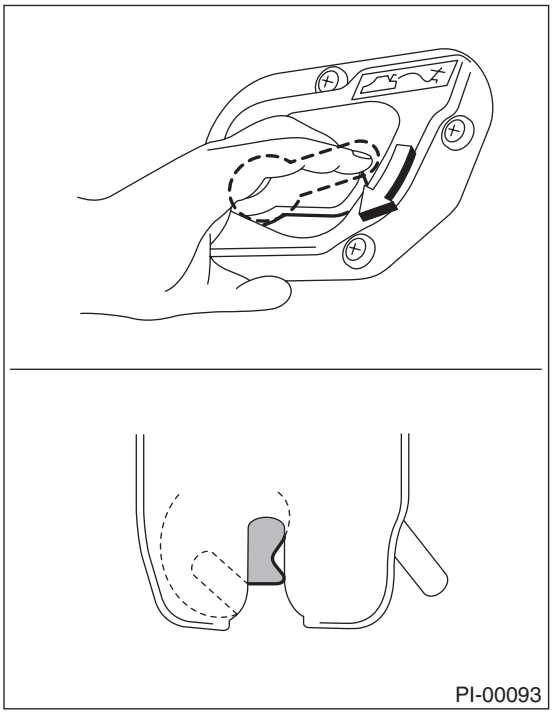

10.OPERATION CHECK OF FUEL LID OPENER LOCK RELEASE LEVER

Operate the fuel lid opener to check that the fuel lid is unlocked normally. Check that the filler cap is securely closed.

11.ACCESSORY CHECK

Check that the following accessories are provided.
- Owner's manual
- Warranty booklet
- Maintenance note
- Spare key
- Jack
- Tool set
- Spare tire

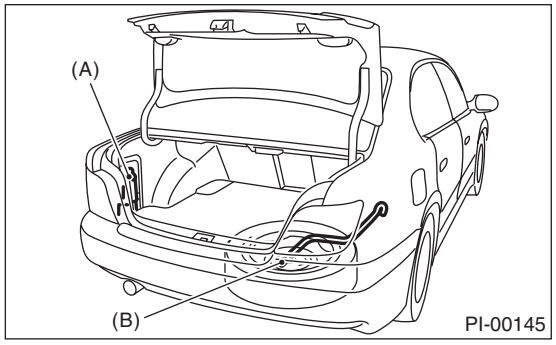

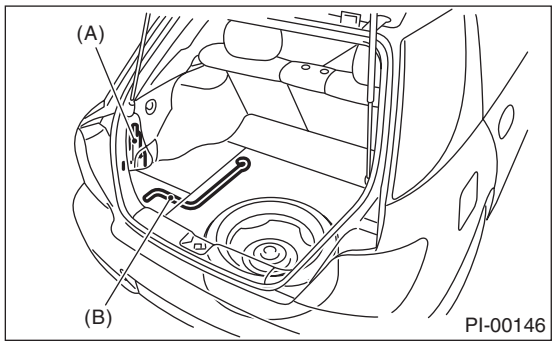

(A) Jack
(B) Jack handle

12.OPERATION CHECK OF FRONT HOOD LOCK RELEASE SYSTEM

Operate the front hood release knob to check that the front hood will unlock properly.

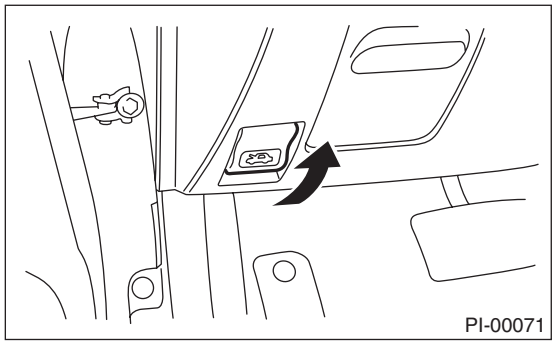

Operate the lever (A) and check that the front hood is opened normally. Support the front hood with hood stay.

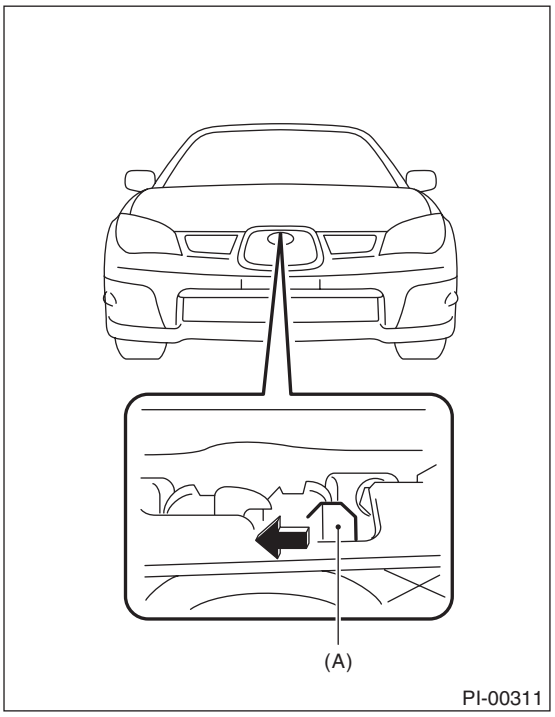

13.BATTERY

Check the battery terminals to make sure that there are no rust or corrosions due to fluid leaks. Check that the battery caps are securely tightened.

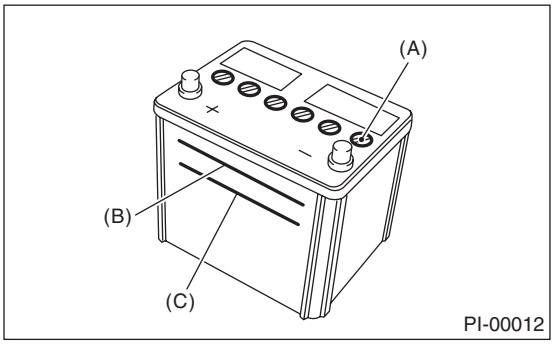

(A) Cap
(B) Upper level
(C) Lower level

14.BRAKE FLUID

Check the brake fluid amount. If the amount is insufficient, carry out a brake line test to identify brake fluid leaks and check the brake operation. After that, refill the brake fluid tank with the specified type of fluid.

15.ENGINE OIL

Check the engine oil amount. If the amount of oil is insufficient, check that no leaks are found. Then, add the necessary amount of the specified engine oil.

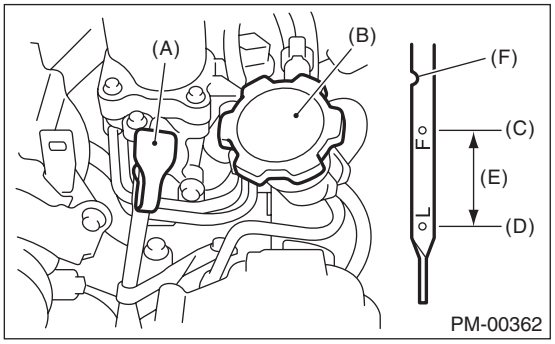

(A) Oil level gauge
(B) Engine oil filler cap
(C) Upper level
(D) Lower level
(E) Approx. 1.0 ℓ (1.1 US qt, 0.9 Imp qt)
(F) Notch mark

16.TRANSMISSION FLUID

Check the amount of transmission fluid. If the amount of fluid is insufficient, check for leaks. Then, add the necessary amount of specified fluid.

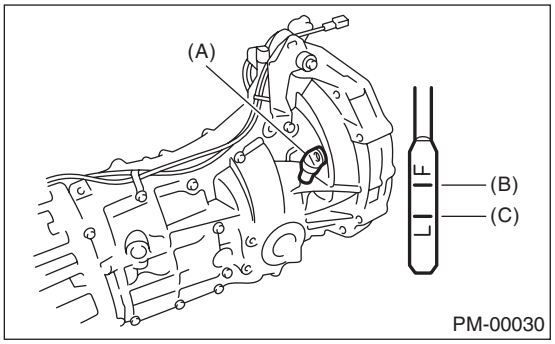

(A) Oil level gauge
(B) Upper level
(C) Lower level

17.AT FRONT DIFFERENTIAL OIL

Check the AT front differential oil amount. If the amount of oil is insufficient, check for leaks. Then, add the necessary amount of the specified AT front differential oil.

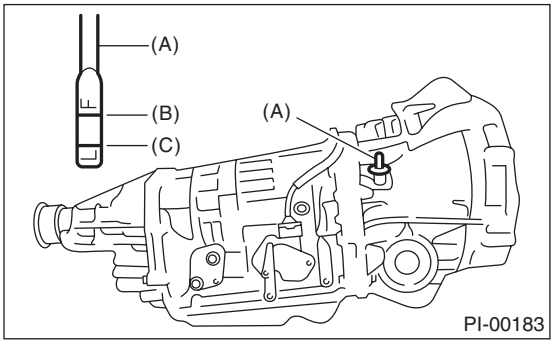

(A) Oil level gauge
(B) Upper level
(C) Lower level

18.ENGINE COOLANT

Check the coolant amount on the reservoir. If the amount of engine coolant is insufficient, check that no leaks are found. Then, add the necessary amount of coolant with the specified concentration.

19.CLUTCH FLUID

Check the clutch fluid amount. If the amount of fluid is insufficient, check that no leaks are found. Then, add the necessary amount of specified fluid.

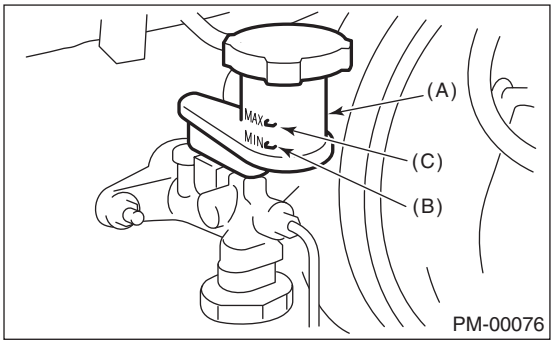

(A) Reservoir tank
(B) MIN. level
(C) MAX. level

20.WINDOW WASHER FLUID

Check the window washer fluid amount. If the amount is insufficient, check that no leaks are found. Then, add the necessary amount of washer fluid.

21.FRONT HOOD LATCH CHECK

Retract the front hood stay and close the front hood. Check that the front hood is completely latched.

22.KEYLESS ENTRY SYSTEM

Check the keyless entry system operations as follows:

- Fully open all the door windows.
- Remove the key from the ignition switch and close all the doors including rear gate.
- Press the “LOCK/ARM” button momentarily on the keyless transmitter. Check that all the doors become locked, the buzzer sounds once, and the hazard lights flash once.

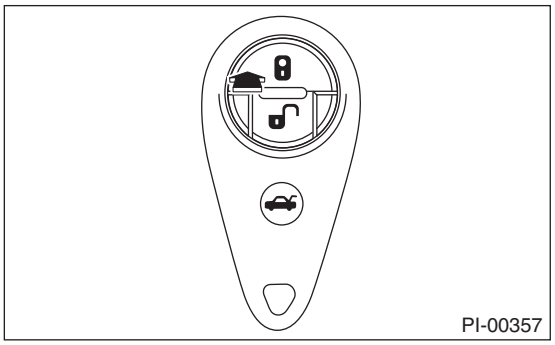

- Press the “UNLOCK/DISARM” button momentarily on the keyless transmitter. Check that the driver’s door is unlocked, the buzzer sounds twice, and the hazard lights flash twice.

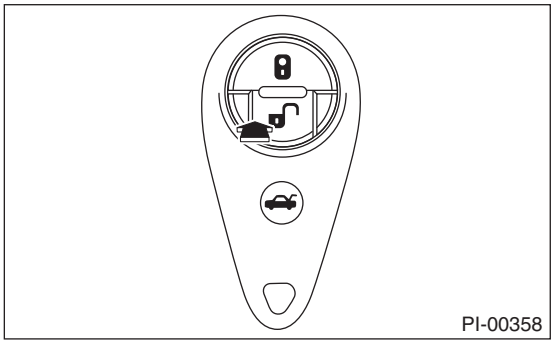

- Within 5 seconds, press the “UNLOCK/DISARM” button momentarily on the keyless transmitter. Check that all the doors including rear gate are unlocked.
- Hold down the “LOCK/ARM” button on the keyless transmitter for approximately two seconds. Check that the panic mode (the horn keeps sounding) is initiated. Also, check that this condition continues for 30 seconds or until when any of the buttons on the keyless transmitter are pressed.
- Press the “LOCK/ARM” button momentarily on the keyless transmitter with one of the doors (including the rear gate) opened. Check that the buzzer sounds 5 times, and the hazard lamp flashes 5 times to notify the door not being fully closed. Next, close all the doors including rear gate. Check if all the doors are locked and buzzer sounds once and the hazard light flashes once.
- With one of the doors open (including the rear gate), press the “LOCK” side (A) of the power door lock switch. Next, close all the doors including rear gate. Check if all the doors are locked and buzzer sounds once and the hazard light flashes once.
  - Driver’s side

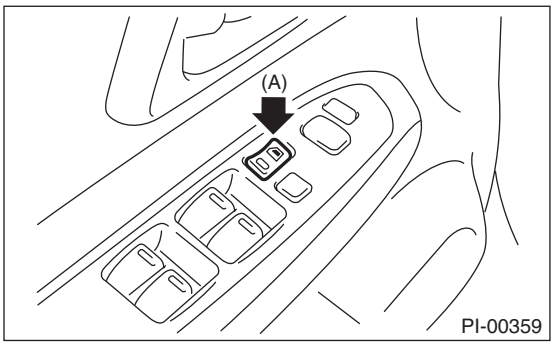

  - Passenger’s side

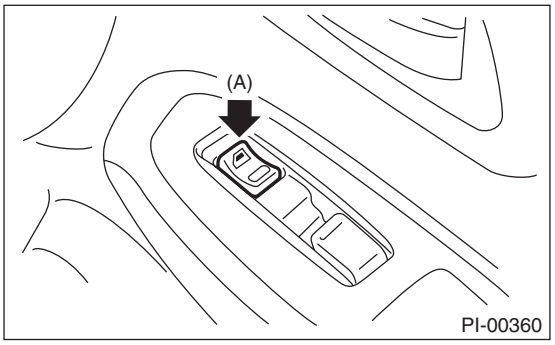

Alarm sound operational check

- The system uses the buzzer and sounds the alarm when the door is locked or unlocked. The alarm sound can be turned OFF. To turn the alarm sound from ON to OFF, close all doors, (with the key not inserted in the key cylinder), hold down the “UNLOCK” side of the power door lock switch and insert the key in the key cylinder. Within 10 seconds, insert and take out the key for 5 times or more, and within 10 seconds after that, open and close the door. With the door closed, the hazard light will flash 3 times, indicating that the alarm sound has been turned OFF. To turn the alarm sound from OFF to ON, perform this procedure again. The hazard lamp will flash 3 times, indicating that the alarm has been turned ON.

23.SECURITY SYSTEM

Check that the security system operates as indicated below.

1) Fully open all the door windows.
2) Remove the key from the ignition switch and close all the doors including rear gate.
3) Press the “LOCK/ARM” button on the keyless transmitter once.

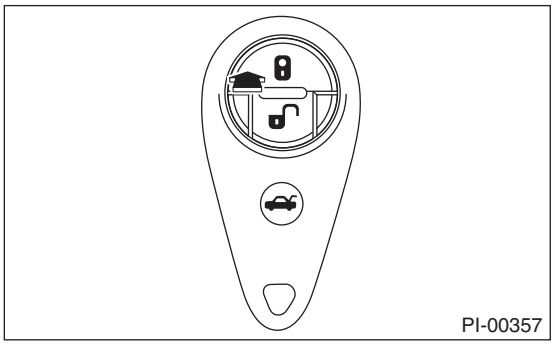

4) If all doors lock, buzzer sounds once, the hazard light flashes once, and the security display light flashes as indicated below, the alarm system is in the monitoring condition.

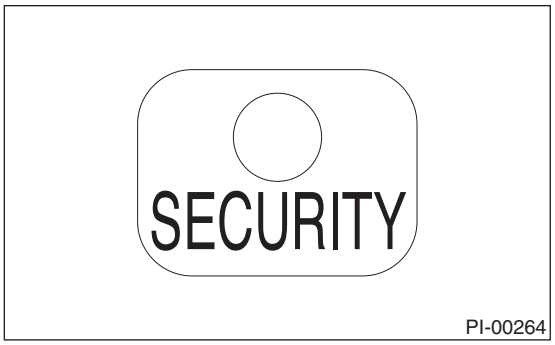

- Alarm system monitoring prepared condition

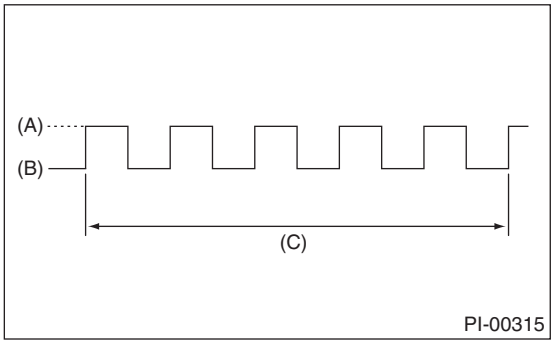

(A) Light ON
(B) Light OFF
(C) 2 seconds

5) Check that the system enters monitoring condition 30 seconds after the condition in 4).

- Alarm system monitoring condition (all models)

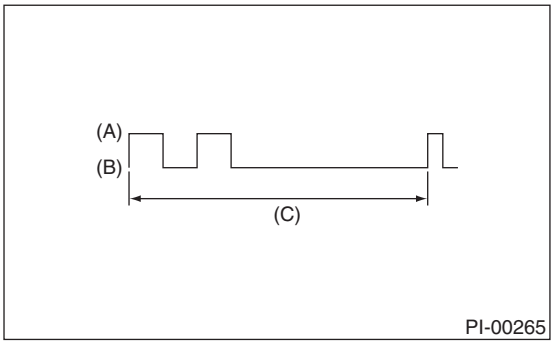

(A) Light ON
(B) Light OFF
(C) 2 seconds

6) Press the “UNLOCK/DISARM” button on the keyless transmitter once.

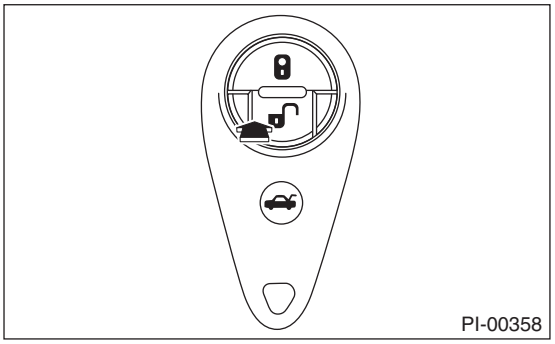

7) The alarm system is in the non-monitoring conditions if the driver’s side door is unlocked, the buzzer sounds twice, the hazard light flashes twice, the room light turns on, and the security display light turns off.

NOTE:
On models without the immobilizer feature, the security display light does not flash after the “UNLOCK/DISARM” of the keyless transmitter is pressed.

• Alarm system non-monitoring condition (models with immobilizer)

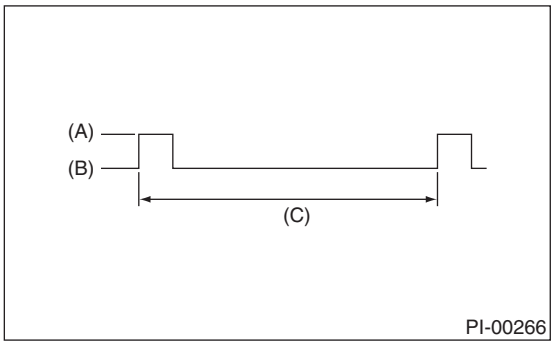

(A) Light ON
(B) Light OFF
(C) 3 seconds

8) Press the “LOCK/ARM” button once on the keyless transmitter with one of the doors (including the rear gate) opened.

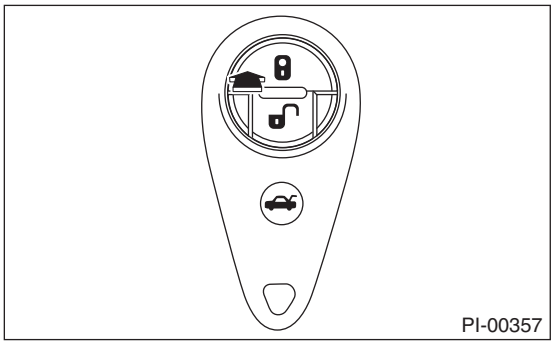

9) Check that the buzzer sounds 5 times to give the door not fully closed warning.
10) Close all the doors including rear gate.
11) Check that the system is in the monitoring condition (all the doors become locked and the buzzer sounds once, and the hazard light flashes once).
• Alarm system monitoring prepared condition

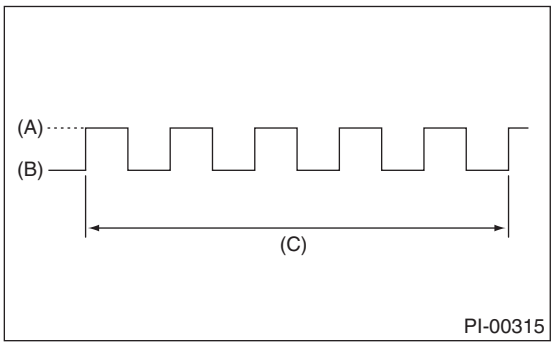

(A) Light ON
(B) Light OFF
(C) 2 seconds

12) Check that the system enters monitoring condition 30 seconds after the condition in 11).

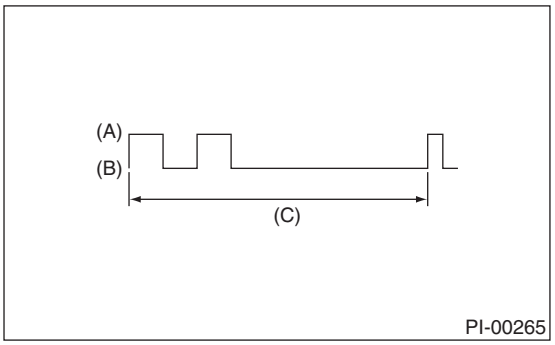

(A) Light ON
(B) Light OFF
(C) 2 seconds

13) With one of the all doors open (including the rear gate), press the “LOCK” side (A) of the power door lock switch.
• Driver’s side

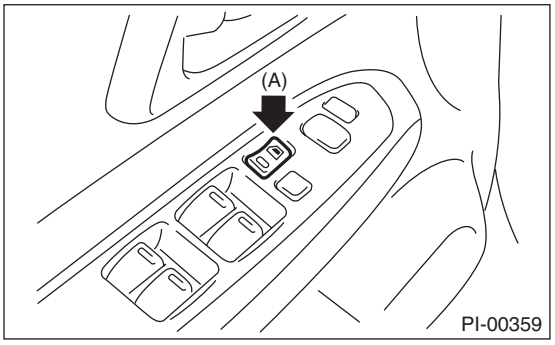

• Passenger’s side

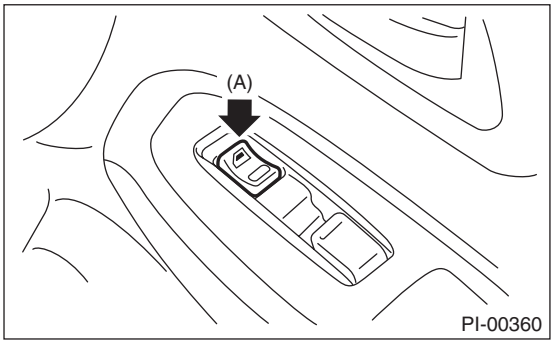

14) Close all the doors including rear gate.

15) If all doors become locked, the buzzer sounds once, and the hazard light flashes once, the alarm system is in the monitoring prepared condition.
- Alarm system monitoring prepared condition

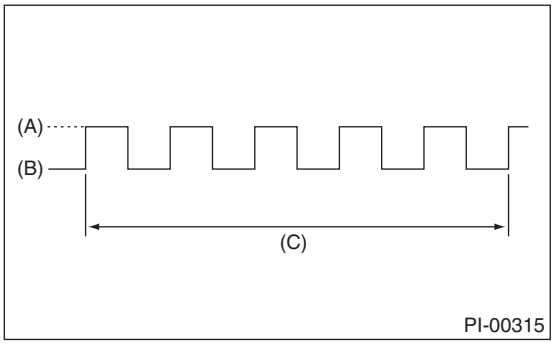

(A) Light ON
(B) Light OFF
(C) 2 seconds

16) Check that the system enters monitoring condition 30 seconds after the condition in 15).

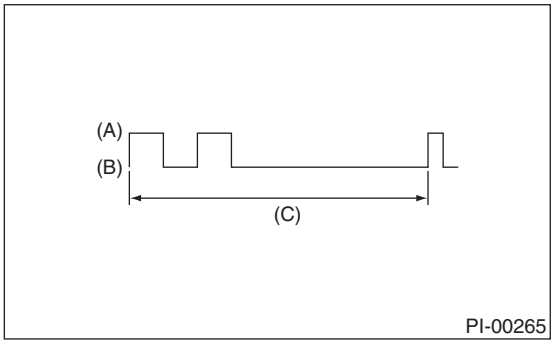

(A) Light ON
(B) Light OFF
(C) 2 seconds

17) When the alarm system is in the monitoring condition, use the inner lock knob or the key to unlock the door, and open the door.
18) Check that the alarm condition occurs (horn sounds continuously, hazard light flashes, security indicator illuminates).
19) Check that the condition in 18) continues for 30 seconds or more, or until the “UNLOCK/DISARM” button of the keyless transmitter is pressed.
20) Check that in the monitoring condition, even if the ignition key is turned to the “START” position, the starter motor does not turn, and that the engine does not start.
21) On models equipped with an impact sensor, hit the front glass with your hand with the alarm system in the monitoring condition, to check that the alarm condition occurs.
22) When none of above is applicable, perform troubleshooting for the security system. <Ref. to SL-22, INSPECTION, Security System.>

24.SEAT

1) Check that each seat provides full functionality in sliding and reclining. Check all available functions of the rear seat such as a trunk-through center armrest.
2) Check the passenger’s seat occupant detection system.
   (1) Turn the ignition switch to ON.
   (2) Check that the passenger airbag ON/OFF indicator lights both turn on simultaneously for approximately six seconds, and after turning off for two seconds, only the OFF light illuminates.

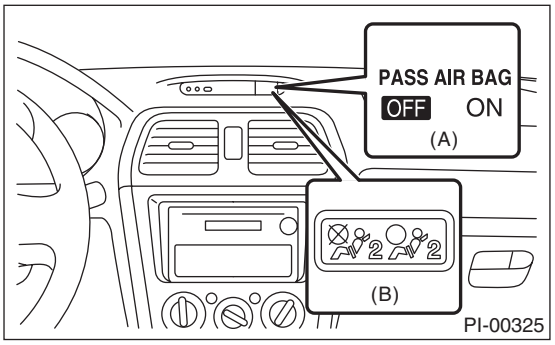

(A) Airbag ON/OFF indicator light (U.S. model)
(B) Airbag ON/OFF indicator light (Canada model)

3) With a person weighing approximately 70 kg (155 lb) or more sitting in the passenger’s seat, check whether the ON light of the passenger’s airbag ON/OFF indicator illuminates or not.
4) Have the passenger get out of the passenger’s seat, and check whether the OFF light of the passenger side airbag ON/OFF indicator illuminates.

25.SEAT BELT

1) Pull out the seat belt and then release it. Check that the belt retracts smoothly.
2) Check that the ALR seat belt operates properly.

26.TEST MODE CONNECTOR

Turn the ignition switch to ON and check that the malfunction indicator light starts blinking. If the light blinks, return the ignition key to LOCK and disconnect the test mode connector. Then, turn the ignition key to ON again. If the malfunction indicator light blinks at that time in spite of the disconnected test mode connector, carry out an engine diagnosis.

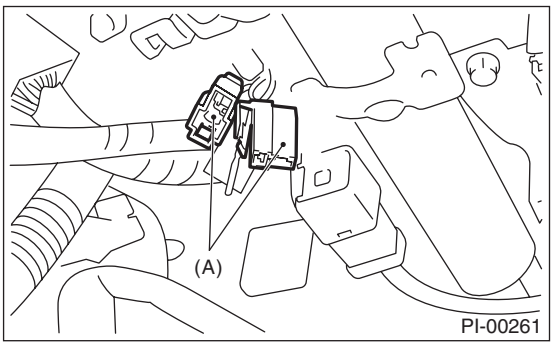

(A) Test mode connector (green)

27.IMMOBILIZER SYSTEM

1) Check that the engine starts with all keys that are equipped on vehicle.
2) 60 seconds after turning ignition switch from ON to ACC or OFF, or immediately after removing the key, check that the security indicator light is blinking.

28.STARTING CONDITION

Start the engine and check that the engine starts smoothly. If the battery voltage is low, recharge or replace the battery. If any noises are observed, immediately stop the engine and check and repair the abnormal components.

29.EXHAUST SYSTEM

Listen to the exhaust noise to see if no noises are observed.

30.INDICATOR AND WARNING LIGHTS

Check that all indicator lights and warning lights are operating correctly.

31.HEATER & VENTILATION

Operate the heater & ventilation system to check for normal airflow outlet control, air inlet control, airflow capacity and heating performance.

32.AIR CONDITIONER

Operate the air conditioner. Check that the A/C compressor operates normally and enough cooling is provided.

NOTE:
To prevent the insufficient lubrication of air conditioner, operate the air conditioner for 5 minutes at idling.

33.CLOCK

Check the clock for normal operations and enough accuracy.

34.RADIO

Check the radio for full functionality and normal noise level. Check the CD unit and AUX operations.

35.FRONT ACCESSORY POWER SUPPLY SOCKET

Check the operation of the front accessory power socket.

36.LIGHTING SYSTEM

1) Check the headlight operations.
2) Check the stop light operation.
3) Check other lights for normal operations.

37.WINDOW WASHER

Check that the window washer system injects washer fluid to the specified area of the windshield shown in the figure.

Front spray position:
A: 257 mm (10.12 in)
B: 512 mm (20.16 in)

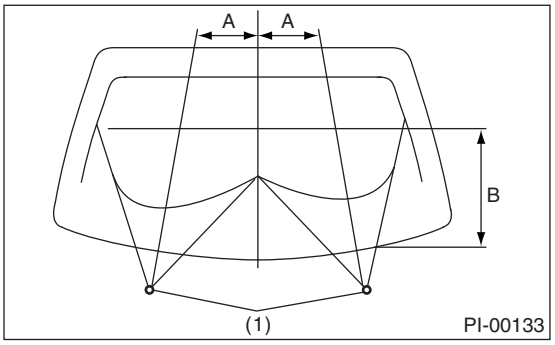

(1) Nozzle

Rear spray position:
A: 39 mm (1.53 in)
B: 72°

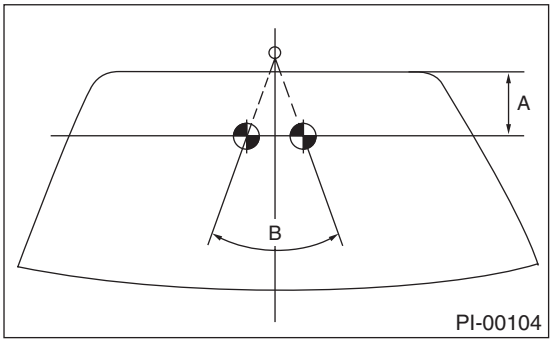

38.WIPER

Check the front and rear wipers for normal operations.

39.POWER WINDOW OPERATION CHECK

Operate the power window switches one by one to check that each of the power windows goes up and down without noises.

40.DRIVER'S CONTROL CENTER DIFFERENTIAL

Check that the indicator light operations normally.

41.BRAKE TEST

Check the foot brake for normal operations.

42.PARKING BRAKE

Check the parking brake for normal operations. When pulling the parking brake lever with a force of 196 N (20 kgf, 44 lb), check that the lever stroke of parking brake lever is 7 to 8 notches.

43.AT SHIFT CONTROL

1) Turn the ignition switch to ON.
2) While brake pedal is not depressed, check if the select lever does not move from “P” range.
3) While brake pedal is depressed, check if the select lever moves from “P” range.
4) Set the select lever to except for “P” range.
5) When the ignition switch is turned to OFF, check if the ignition key switch cannot be removed.
6) Set the AT selector lever to each gear position and check the shifting while driving the vehicle.

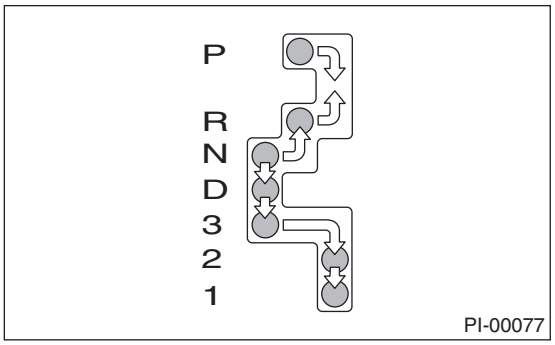

Selector position	Gear position			
	1st	2nd	3rd	4th
D	OK	OK	OK	OK
3	OK	OK	OK	—
2	—	OK	—	—
1	OK	—	—	—

44.CRUISE CONTROL

Operate the cruise control system. Check that the system is activated and deactivated correctly.

45.ATF LEVEL

After selecting all positions (P, R, N, D, 3, 2, 1), set the select lever in “P” range. Idle the engine for 1 — 2 minutes, and measure the ATF level. If the amount is insufficient, check that no leaks are found. Then, add the necessary amount of the specified ATF.

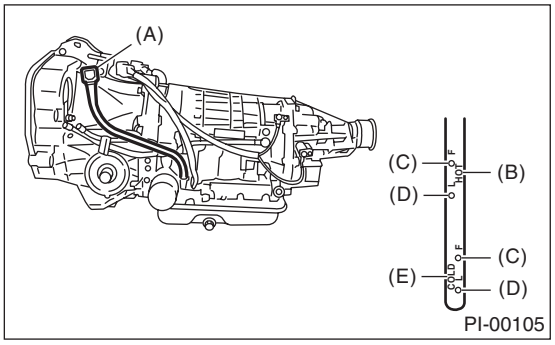

(A) Level gauge
(B) Inspection position when “HOT” 70 — 80°C (158 — 176°F)
(C) Upper level
(D) Lower level
(E) Inspection position when “COLD” [20 — 30°C (68 — 86°F)

46.POWER STEERING FLUID LEVEL

Check that the power steering fluid level is normal. If insufficient, check for leaks. Then add the necessary amount of the specified power steering fluid.

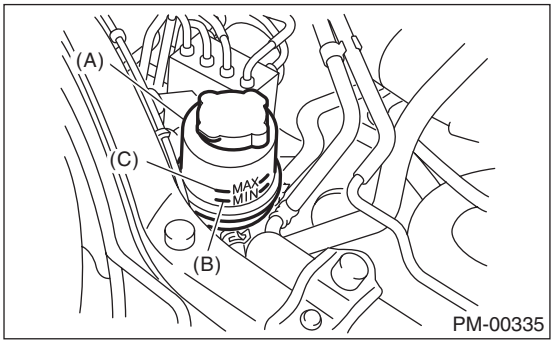

(A) Reservoir tank
(B) MIN. level
(C) MAX. level

47.FLUID LEAK CHECK

Check entire areas of the vehicle for any trace of coolant/oil/fluid leaks.

48.WATER LEAK TEST

Spray the vehicle with water using a hose and check that no water enters the passenger compartment.

- Before performing the water leakage test, remove anything that may obstruct the operation or which must be kept dry.
- Close all the windows and doors securely. Close the front hood, trunk lid and rear gate before starting the test.
- Connect a hose to a tap, and spray water on the vehicle. The rate of water spray must be approx. 20 to 25 ℓ (5.3 — 6.6 US gal, 4.4 — 5.5 Imp gal) per minute.

When spraying water on areas adjacent to the floor and wheel house, increase the pressure. When spraying water on areas other than the floor and wheel house, decrease the pressure. But the force of water must be made strong occasionally by pressing the end of the hose.

NOTE:
Be sure to keep the hose at least 10 cm (3.9 in) away from vehicle.

Check the following areas.

- Front window and body framework mating portion
- Door mating portions
- Glass mating portions
- Rear quarter window mating portions
- Rear window and body framework mating portion
- Around roof drips

If any dampness in the compartments is discovered after the water has been applied, carefully check all the areas that may have possibly contributed to the leak.

49.APPEARANCE CHECK 2

1) If protective coating (lap guard) is applied, remove it.

NOTE:
- When removing the lap guard, using steam will make it easier to remove.
- Vehicle left for a extended periods or at low temperatures, spray the vehicle with water heated 50 — 60°C (122 — 140°F) to raise the surface temperature before peeling off the wrap guard. Do not use the water heated to over 60°C (140°F).
- If the adhesive remains exist on the coated surface, soak a flannel rag, etc. with a small amount of coating wax or solvent such as oil benzene and IPA, put the soaked cloth on the remains lightly, and then wipe them off with a flannel rag etc.
- Keep solvent from touching the resin or rubber parts. Do not use coating wax or solvents while the component surface temperature is hot due to hot weather etc.
- If the coated surface is swollen out due to seams or moisture, expose the vehicle to the sunlight for a few hours or heat the seam and swollen portions using a dryer etc.
- Dispose of the peeled wrap guard as burnable industrial garbage.

2) Check the whole vehicle body for flaking paint, damage by transportation, corrosion, dirt, cracks or blisters.

NOTE:
- It is better to determine an inspection pattern in order to avoid missing an area, since the total inspection area is wide.
- Do not repair the body paint unless absolutely necessary. Also, if the vehicle is in need of repair to remove scratches or corroded paint, the repair area must be limited to the minimum. Re-painting and spray painting must be avoided as much as possible.

3) Check each window glass for scratches carefully. Slight damage may be removed by polishing with cerium oxide. (Fill a cup half with cerium oxide, and add warm water to it. Then agitate the content until it turns to wax. Apply this wax to a soft cloth, and polish the glass with it.)

4) Check each portion of the vehicle body and underside components for the formation of rust. If rust is discovered, remove it with sandpaper of #80 to #180 and treat the surface with rust preventive. After this treatment is completed, flush the portion thoroughly, and prepare the surface for repair painting.

5) Check each portion of body and all of the chrome parts for deformation or distortion. Also, check each light lens for cracks.

PERIODIC MAINTENANCE SERVICES

PM

		Page
1.	General Description	2
2.	Schedule	3
3.	Engine Oil	6
4.	Engine Oil Filter	8
5.	Spark Plug	9
6.	V-belt	10
7.	Timing Belt	12
8.	Fuel Line	15
9.	Fuel Filter	16
10.	Air Cleaner Element	17
11.	Cooling System	18
12.	Engine Coolant	20
13.	Clutch System	22
14.	Transmission Gear Oil	23
15.	ATF	24
16.	Front & Rear Differential Gear Oil	26
17.	Brake Line	28
18.	Brake Fluid	30
19.	Disc Brake Pad and Disc	31
20.	Parking Brake	32
21.	Suspension	33
22.	Wheel Bearing	35
23.	Axle Boots & Joints	36
24.	Tire Rotation	37
25.	Steering System (Power Steering)	38